Pioneering
high voltage.

Installation-, Operation- and Maintenance Manual

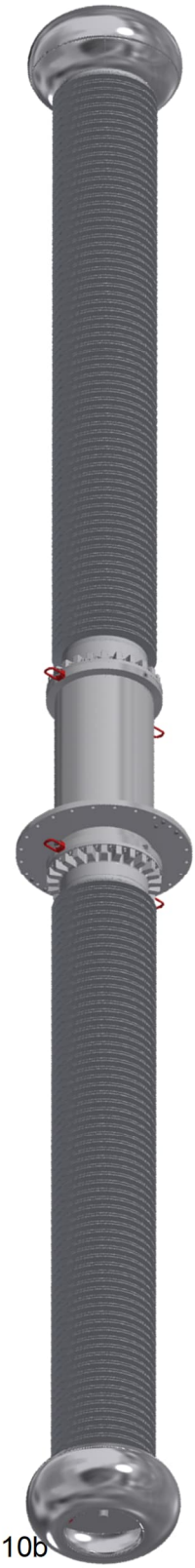

HVDC-Wallbushings

Range

GSEWt

Contents

1 Documentation notes 5
1.1 How the text is displayed in this document 5
1.1.1 Descriptions 5
1.1.2 Instructions 5
1.1.3 Cross-references 5
1.1.4 Lists 5
1.1.5 Additional applicable documents 5
1.2 Storage of documents 5
1.3 Validity of instructions 6
1.4 Target groups 6
2 Safety 7
2.1 Classification of the handling-relevant warning instructions 7
2.2 Intended use 7
2.3 General safety instructions 8
2.3.1 Danger to life from electrocution 8
2.3.2 Crush and impact danger from suspended loads 9
2.4 Obligations of the integrator/operator 9
2.4.1 Action in the event of fire 9
2.4.2 Action in the event of an accident 10
2.5 Qualification of the personnel 10
2.6 Personal protection equipment 10
3 Structure 12
3.1 General structure 12
3.2 Design 13
4 Technical data 14
4.1 General operating conditions 14
4.2 Mechanical stress 14
5 Installation 15
5.1 Delivery of the bushing 15
5.2 Preparing the bushing 16
5.2.1 Checking the scope of supply 17
5.2.2 Checking the condition of the bushing 17

5.2.3 Slinging the bushing 18
5.2.4 Putting the bushing down 20
5.3 Mounting of the bushing into the wall 20
5.3.1 Slinging of the bushing for assembly 20
5.3.2 Mounting of the bushing into the wall 20
5.3.3 Screwing of the bushing into the wall 20
5.3.4 Earthing of the bushing flange 21
5.3.5 Assembly of shielding electrodes and high voltage connections 21
5.3.6 Unscrewing of the lifting lugs 21
5.4 Mounting of a bushing into the floor (vertical mounting) 21
5.4.1 Lifting of the bushing to bring it into a vertical position 21
5.4.2 Mounting of the bushing into the floor 22
5.4.3 Earthing of the bushing flange 22
5.4.4 Assembly of shielding electrodes and high voltage connections 23
6 Preparation for commissioning 24
6.1 Check the bushing 24
6.1.1 Visual inspection 24
6.1.2 Electrical testing 24
7 Maintenance 25
7.1 Maintenance schedule 25
7.2 Check and clean insulator surface (silicone insulator) 25
7.3 Check bushing electrically 27
7.3.1 Measuring equipment 28
7.3.2 Measuring procedure 28
7.3.3 Threshold values 28
7.3.4 Test tap 30
7.4 Check the temperature using a thermal image 31
8 Repair 32
8.1 Smaller damages 32
8.2 Huge damages 32
9 Storage 33
10 Disposal 34
10.1 Constituent parts of the bushing 34
11 Standard torques 35

11.1 Standard torques 35
11.2 Standard torques for test-tap caps 35

1 Documentation notes

The following describes how the text is presented and to whom the instruction applies.

1.1 How the text is displayed in this document

1.1.1 Descriptions

Descriptions are normal running text.

1.1.2 Instructions

▶	Instruction
▷	Sub-instruction
→	Reaction of product to instruction

1.1.3 Cross-references

Chap. XX on Page YY	Reference to a different chapter

1.1.4 Lists

•	Bullet point, 1st. level
○	Bullet point, 2nd. level
■	Bullet point, 1st. level for instructions

1.1.5 Additional applicable documents

▶ Please observe:

- All instruction manuals included with the product
- The associated bushing specification

1.2 Storage of documents

This documentation and all its associated applicable documents must be stored in the vicinity of the product and be accessible to the personnel.

1.3 Validity of instructions

These instructions apply exclusively to the type range GSEWt.

1.4 Target groups

These instructions are directed to expert operatives:

- Integrator of the bushing
- Installation and maintenance personnel

2 Safety

The following safety information applies for the entire instructions.

2.1 Classification of the handling-relevant warning instructions

⚠ DANGER

This warning instruction indicates a dangerous situation, which will **inevitably** lead to a severe or fatal accident if it is disregarded.
► Handling instruction for danger defense

⚠ WARNING

This warning instruction indicates a dangerous situation, which **may** lead to a severe or fatal accident if it is disregarded.
► Handling instruction for danger defense

⚠ CAUTION

This warning instruction indicates a dangerous situation, which **may** lead to slight or medium-severity accident if it is disregarded.
► Handling instruction for danger defense

NOTICE

This warning instruction indicates a dangerous situation, which may result in material damage if it is disregarded.
► Handling instruction for danger defense

ⓘ Information and tips

2.2 Intended use

In the event of non-intended use, dangers to life and limb and damage to the product and other assets could be created.
The wall bushings in the range GSEWt are high-voltage bushings for the integration into a HVDC converter substations and other structures with HVDC power transmission.

Intended use includes:

- observance of all product instructions and instructions concerning the components of the installation

- operation of the product without changes to the product
- operation of the product within the specified operational limits (see bushing specification)
- compliance with all inspection and maintenance conditions

Any use other than those described in the existing instructions, or use that extends beyond those described here, is considered to be on-intended.

The manufacturer is not liable for damage resulting from non-intended use. The manufacturer's warranty becomes void in the event of non-intended use. The operator bears the risk exclusively.

2.3 General safety instructions

There are dangers associated with the bushings.

▶ Observe all the regulations that apply to the following areas:
- Electrical voltages
- Moving machines
- Heavy weights
- Moving masses
- Injury caused by slipping, tripping, and falling down

▶ Observe all the relevant local regulations and legal stipulations.
▶ Observe the local hazardous material instructions.
▶ Observe the operating instructions

2.3.1 Danger to life from electrocution

There is a danger of electrocution when working on the bushing.

▶ Observe the **five safety rules** before working on the bushing:
- Disconnect
- Secure against switching on again
- Establish freedom from voltage
- Ground and short-circuit
- Cover or cordon off adjacent live parts

2.3.2 Crush and impact danger from suspended loads

There are injury dangers from suspended loads (lifted bushings etc.).

▶ Be aware of uncontrolled movements of the loads with lifted bushings.
▶ Never work under a suspended bushing.

2.4 Obligations of the integrator/operator

The integrator/operator has the following supervisory obligations:

- Supplementation of general safety information with local regulations
- Provision of first aid kit, fire extinguisher
- Ensure that only qualified personnel work on the product
- Ensure that the personnel are trained in first aid
- Provision of appropriate personal protection equipment
- Make sure that all safety devices are always present and are operating
- Regular training of the personnel in the following subjects:
    - Observance and use of all instruction documents
    - Intended use of the product
    - Knowledge of all safety devices and safety signs at the operating location
    - Observance of the legal regulations
    - Observance of the operating instructions

2.4.1 Action in the event of fire

▶ Report the fire:
- Call the local emergency phone number

▶ Move to a safe area:
- Take any endangered persons with you
- Close doors
- Follow the marked escape route
- Wait for instructions

▶ Try to extinguish the fire.
- Use the fire extinguisher

2.4.2 Action in the event of an accident

- Report the accident:
  - Call the local emergency phone number
- Employ first aid:
  - Secure the site of the accident
  - Provide care for the injured persons
  - Observe the instruction manuals
- Take any other measures:
  - Direct the ambulance or fire brigade
  - Remove rubberneckers

2.5 Qualification of the personnel

All work on the product requires expert technical knowledge. In order to ensure operational safety, only expert operatives or a technically trained person is allowed to work on the product.

The personnel must be able to evaluate the tasks allocated to him, to recognize possible dangers, and to take the appropriate safety measures.

The integrator/operator must ensure the qualification of the personnel.

2.6 Personal protection equipment

The integrator/operator is responsible for the provision of appropriate personal protection equipment.

HSP recommends:

	Protective clothing
	Hearing protection

	Head protection (safety helmet)
	Eye protection (safety goggles, possibly close-fitting)
	Hand protection (for protection from mechanical and chemical dangers)
	Foot protection (safety shoes)
For additional special local dangers	Additional appropriate protection equipment

3 Structure

This chapter describes the structure and design of the bushing.

3.1 General structure

Pos	Teil
1	Connection terminal
2	Head
3	Insulating body Side 1
4	Flange
5	Insulating body Side 2

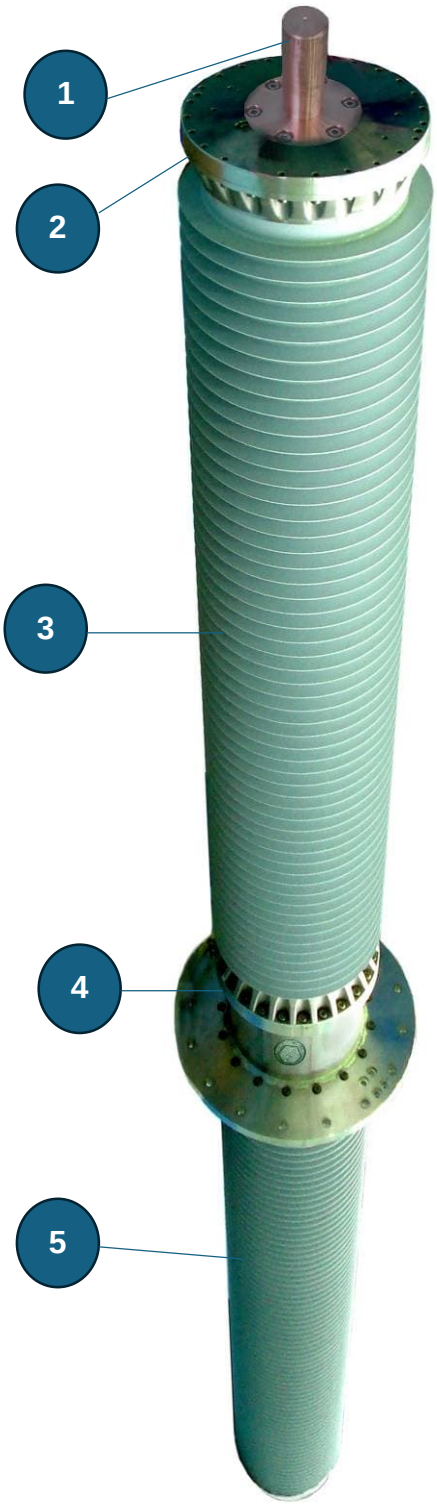

Fig. 1: Structure of the bushing

3.2 Design

The main insulation of the RIP HVDC wall bushing is an insulating body (6). It is made of a special paper which is impregnated with epoxy resin under vacuum and has coaxially and axially graduated (5) grading layers made of aluminium foil which guarantee uniform voltage distribution along the insulating body.

The current conductor tube (4) made of E-Cu is undetachably connected to the insulating body and by special contact joints (2) connected to the external connecting bolts (1).

Above that internal electrodes (3) in the head areas support the external voltage distribution of the bushing.

This unit is installed in composite insulators (11) which together with the bushing flange (10) make the external bushing housing. The composite insulators are made of fibre-glass re-inforced epoxy resin tube with silicone sheds vulcanized directly on to it and the flange armatures, which are undetachably joint to the tube in a special technique and vulcanized on to it.

The gap between the composite insulators and the insulating body is filled with a foamed polyurethane elastomer (12) which forms a solid but elastic joint of the elements. Therefore, it is not possible to disassemble these parts without destroying them.

The bushing flange is screwed together with the two composite insulators and has an extended part which goes through the wall. Depending upon the specific design on the flange close to the centre of gravity of the bushing there are lifting eyes (9). In addition, the test tap (7) and threaded bores (8) for grounding purposes are located in the flange.

On both ends of the bushing the composite insulators are closed by covers (13) which at the same time bear the sealed, fixed connecting bolt and the fixing holes for the external shielding electrodes.

All sealings are O-ring sealings in defined chambers.

The external shielding electrodes (14) have a different shape especially for the hall side of the bushing to achieve better accommodation to the progressing connecting lead.

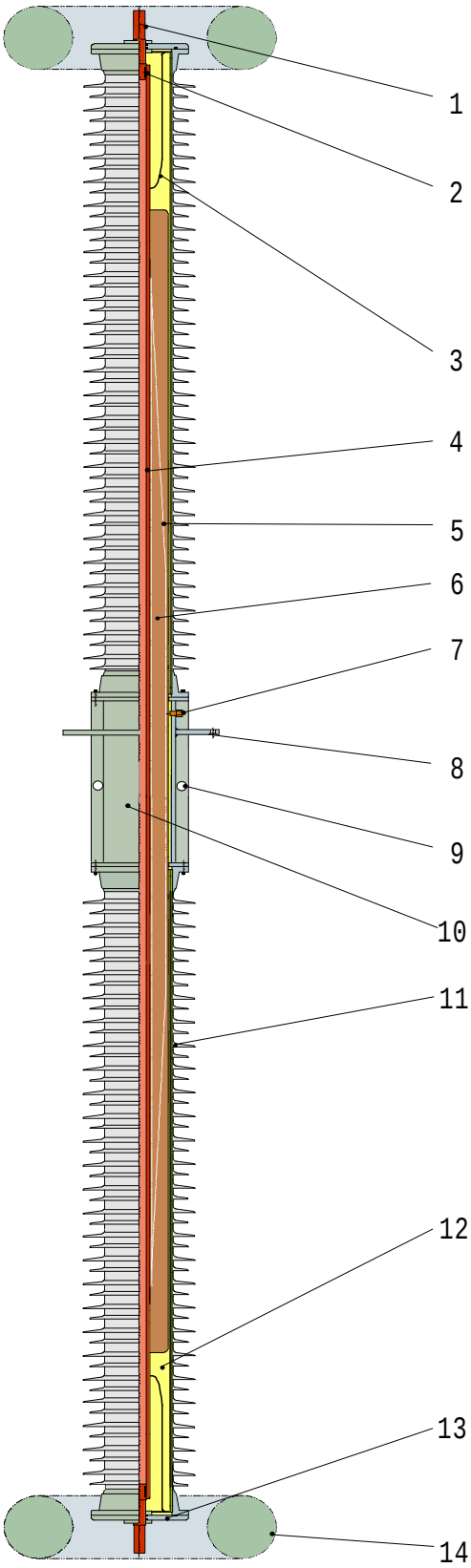

Fig. 2: Bushing design (example)

4 Technical data

Standard values are stated in the technical data.

▶ Always observe the bushing specification applicable to the bushing for the product-specific values.

4.1 General operating conditions

Classification (GSEWt)	**G** DC **S** Silicone **E** Epoxy resin impregnated special paper with capacitive grading **W** wallbushing **t** dry filling
Ambient temperature	Hall side or indoor – air side: - 10°C up to + 50°C Outdoor side: - 30°C up to + 40°C corresponding to temperature class 2 acc. to IEC 60137
Operation height	< 1000 m a.s.l.
Pollution class	In accordance with the specific creepage distance (as per IEC 60815)
Corrosion protection	All armatures and fixing material made from corrosion resistant materials
Marking	On name plate, as per IEC 65700
Standard packaging	Wooden crate (heat treated), bushing supported by styro-foam cushions at the head and flange, flange fixed, sealed in plastic foil with desiccant bags added.

4.2 Mechanical stress

Test bending load	Standard, acc. to IEC 65700, table 3, Heavy Load
Operating load	50 % of test bending load

5 Installation

This chapter covers the preparation, execution and post-treatment of the installation.

NOTICE

Material damage caused by mechanical stress

The bushing can suffer damage (particularly to the porcelain or silicone insulators) from mechanical stresses.

► When installing, make sure that the bushing is not exposed to mechanical stresses (particularly to porcelain or silicone insulators).

5.1 Delivery of the bushing

The bushing is transported in a wooden crate. It is padded on wooden or foam half-shells, which are arranged at the head and in the flange area. Any shielding electrodes are removed for transport and packed separately. In addition, the flange and heads are supported with crosspieces and fixed with steel tie rods or tensioning straps for larger bushings.

Fig. 3: Wooden crate example

The complete bushing is wrapped in a plastic foil with inserted desiccant bags.

Fig. 4: Positioning of the bushing inside the wooden crate

The transport crate may only be lifted at the points marked for this purpose. Only transport and store the crate in a horizontal position.

Fig. 5: Lifting and loading of the crate via forklift

Fig. 6: Lifting with lifting slings

All crates of same dimension are stackable once.

5.2 Preparing the bushing

▶ Opening of the transport crate:

- Unscrew the screws on the cover timbers

Fig. 7: Screws of the cover timbers

- Lift the covers from the crate using a crane

Fig 8: Cover of a HSP transport crate

▶ Check the PE foil covering the bushing for damage..

NOTICE

Material damage caused by knives

The bushing can suffer damage when unpacking with a knife.
▶ Always unpack the bushing using a safety knife (with a concealed blade).

▶ Open the PE foil

5.2.1 Checking the scope of supply

▶ Check the scope of supply for completeness and damage, using the:

- Delivery note
- Bushing specification
- Packing note (if present)

▶ Check whether the bushing was delivered in proper packaging:

- In a wooden crate
- Supported by hart foam or wooden half-shells
- Sealed in PE foil with addition of desiccant bags
- For larger bushings: Flange supported with wooden cross beams

▶ If a data logger is included in the scope of supply, then provide the HSP data of the data logger.

5.2.2 Checking the condition of the bushing

▶ Check the condition of the bushing visually for damage.

5.2.3 Slinging the bushing

NOTICE

Material damage by lifting the bushing improperly

If a bushing with silicone insulator is lifted up on the insulator, the sheds may suffer damage.

► Never lift a bushing with silicone insulator on the insulator.

NOTICE

Material damage by putting the bushing down incorrectly

If the bushing is put down with one end on the floor, then invisible cracks may be created by impacts.

► Never put the bushing down on the floor.

► Sling the bushing with one of the possible slinging variants:

Lifting versions	Short explanation
Two lifting devices (e. g. cranes) (The recommended variant)	One lifting device is fixed to the flange on the bushing. The other lifting device is fixed to the head on the bushing.
One lifting device (e. g. crane) (If only one lifting device is available)	The lifting device is fixed both on the flange and on the head of the bushing.
One lifting device (e. g. crane) + counter weight	One lifting device is fixed to the flange on the bushing. The counterweight is fixed to the head opposite the center of gravity.

► Lift the bushing.

5.2.3.1 Two lifting devices (Cranes etc.)

Prerequisite: The lifting devices permit any inclined position required for installation.

The sling points are removable lifting lugs (in scope of supply) on the flange and on the heads of the bushing.

► Attach the lifting accessories of the lifting devices to the sling points on the flange and the head.

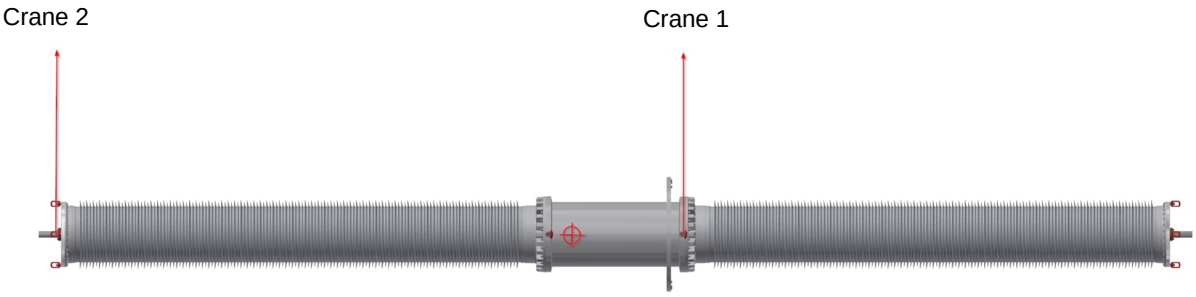

Fig 9: Lifting of a bushing using two lifting devices

⚠ DANGER

Danger to life and damage to equipment due to incorrect lifting

The weight of the bushing may only ever be borne by the lifting lugs on the flange (crane 1 in the picture). Only these lifting points have the necessary load-bearing capacity.

▶ Never lift the bushing by only one or at both head ends!

5.2.3.2 One lifting device (crane etc.)

▶ Attach lifting accessories from crane shackle to flange lifting lugs
▶ Suspend a pulley to the same shackle.
▶ Guide the lifting accessories on the pulley to the bushing head on the center of gravity side Tighten the pulley until the length of both lifting accessories is such that the crane shackle is positioned above the center of gravity of the bushing.

5.2.3.3 One lifting device (crane etc.)+ counterweight

A counterweight can be used to lift the bushing with a crane.

To do this, the bushing is fitted with an additional weight (1) at the lighter head end, the size of which must be balanced (Fig. 10).

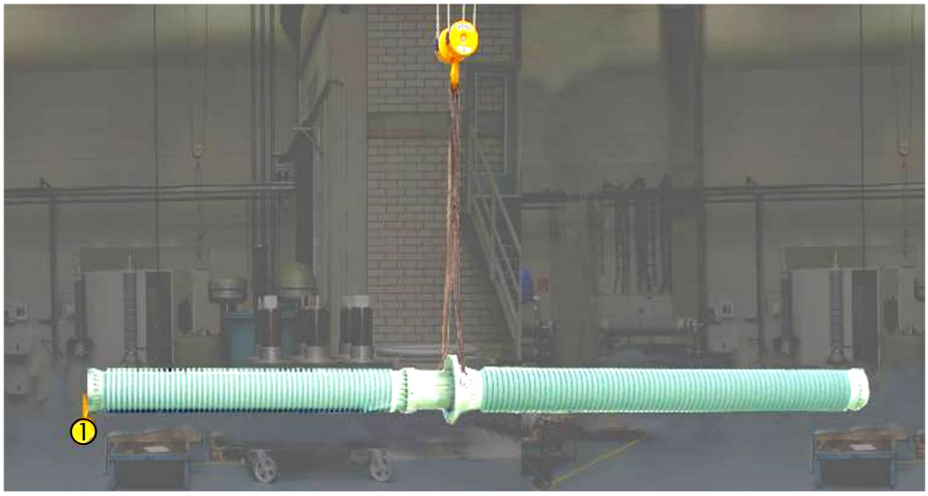

Fig 10: Lifting of a bushing using a counterweight (1)

5.2.4 Putting the bushing down

NOTICE

Material damage by putting the bushing down improperly

If a bushing with silicone insulator is put down on the insulator, the sheds may suffer damage.

► Always put the bushing with silicone insulator down only on the head and on the flange.

NOTICE

Material damage by putting the bushing down incorrectly

If the bushing is put down with one end on the floor, then invisible cracks may be created by impacts.

► Never put the bushing down on the floor.

Put the bushing down properly on load supports (supported at the same points as in the crate).

5.3 Mounting of the bushing into the wall

► To install the bushing in the wall (incl. sealing of the bushing and tightening of the fastening screws) please refer to the system integrator's manual

5.3.1 Slinging of the bushing for assembly

Sling the bushing for assembly (Chap.. 5.2.3 on page 18).

5.3.2 Mounting of the bushing into the wall

The bushing is then lifted and positioned in front of the wall opening so that it can be slowly inserted according to the installation angle. This should be corrected by hand using ropes at the heads from the floor so that the silicone sheds do not touch the wall under any circumstances. The flange is screwed in place using the fasteners provided on site.

If the measuring tap (see also chapter 7.3.4 page 30) is located on the outdoor side of the wall, we recommend installing the bushing with the measuring tap pointing downwards.

5.3.3 Screwing of the bushing into the wall

► For mounting the bushing (incl. tightening the fastening screws and sealing the bushing [sealing and fastening material not HSP scope of delivery]:

- Observe the manual of the system integrator
- Observe the standard torques (Chap.. 11 on page 35).
- For flat gaskets, ensure suitable external support :

▶ Tighten the fastening screws

5.3.4 Earthing of the bushing flange

▶ Connect the bushing flange to earth:
Connect the flange to the wall using earthing screws (included in the scope of delivery) and earthing straps or connect earthing cables to suitable earthing connections on the wall

5.3.5 Assembly of shielding electrodes and high voltage connections

▶ Fit the supplied shields to the heads of the bushing. The screws for mounting the shields are already screwed into the corresponding holes at the heads of the bushing at the factory

NOTICE

Material damage due to damage to the aluminium sheet shielding electrodes

The aluminium sheet electrodes are sensitive components. The components can be damaged when unpacking and moving on site.
▶ Handle the components with care and only install undamaged components

- Observe the standard torques (Chap. 11 on page 35).
- The high voltage connections for the indoor and outdoor connection are made according to the specifications of the equipment to be connected.

5.3.6 Unscrewing of the lifting lugs

▶ Unscrew the lifting lugs from flange and heads.
▶ Mount the plastic covers on the threaded bores.

5.4 Mounting of a bushing into the floor (vertical mounting)

▶ To install the bushing in the floor (incl. sealing of the bushing and tightening of the fastening screws) please refer to the system integrator's manual

5.4.1 Lifting of the bushing to bring it into a vertical position

The following instructions explain the lifting procedure with two cranes (Fig. 11).

Needed parts and lifting devices:

- 4x fitting lifting ropes of correct weight class and length:
  2x long lifting ropes for top/upper flange section(1) and
  2x short lifting ropes for lower flange section (2)
- 2x Shackles

The two lifting ropes (1) must be long enough to reach from the flange through the lifting eyes on the head terminal to the crane hook. The ropes are firstly attached to the flange with shackles. Then the lifting ropes are attached to the head using two more shackles. Ensure that the straps are guided through the shackles, as these only serve as a guide at the head of the bushing. It is important that the entire weight of the bushing hangs on the middle flange, not on the head flange.

The two short lifting ropes (2) are attached to the lower flange section of the bushing.

To bring the bushing into the vertical position, first lift the entire bushing. Then only the top end (1) is lifted further, and the middle flange section (2) remains in position. The head section is lifted until the bushing is hanging securely from the lifting ropes in the vertical position and the lower ropes are hanging loose.

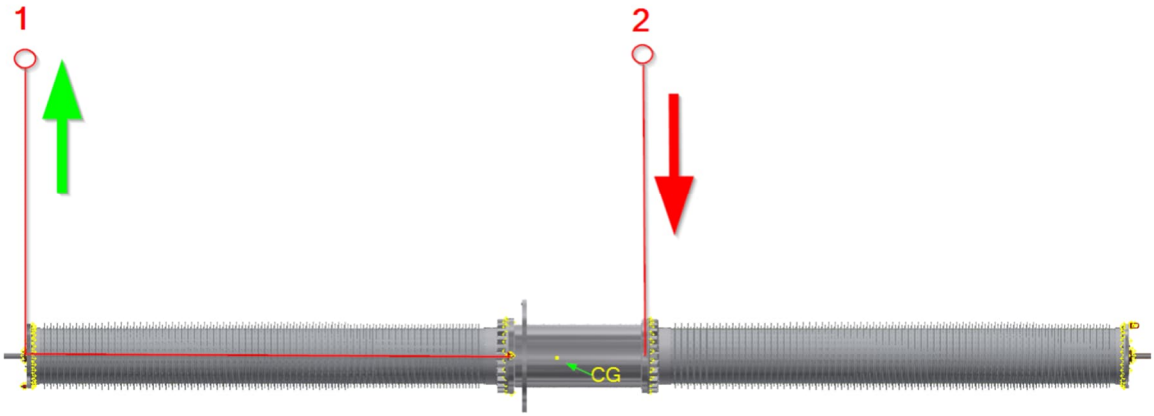

Fig 11: Lifting of a bushing to bring it to a vertical position

5.4.2 Mounting of the bushing into the floor

The bushing is positioned above the floor opening so that it can be slowly lowered I not its position. The bushing should be guided by hand so that the silicon sheds do not touch the floor under any circumstances. The flange is screwed in place using the fasteners provided on site

5.4.3 Earthing of the bushing flange

▶ Connect the bushing flange to earth:
Connect the flange to the wall using earthing screws (included in the scope of delivery) and earthing straps or connect earthing cables to suitable earthing connections on the floor

5.4.4 Assembly of shielding electrodes and high voltage connections

▶ Fit the supplied shields to the heads of the bushing. The screws for mounting the shields are already screwed into the corresponding holes at the heads of the bushing at the factory

NOTICE

Material damage due to damage to the aluminium sheet shielding electrodes

The aluminium sheet electrodes are sensitive components. The components can be damaged when unpacking and moving on site.

▶ Handle the components with care and only install undamaged components

6 Preparation for commissioning

This chapter covers activities and tests before commissioning.

6.1 Check the bushing

▶ Check the status of the bushing before commissioning.

6.1.1 Visual inspection

▶ Check the visible parts of the bushing for damage visually.
▶ Make sure that all screw connections are tightened in accordance with the stipulations (Chap. 11 on page 35).
▶ Make sure that the removable cap on the test tap is screwed on tightly.

6.1.2 Electrical testing

All bushings are tested in final acceptance tests and are tested suitable for operation.

The electrical measurements include:

- Bushing capacitance as main capacitance C_1
- Power factor (loss factor) of main capacitance tan δ

The capacity C_2 between the last grading layer and the flange, and the power factor tan δ of C_2 can be measured. However, they do not facilitate any statement concerning the main insulation, and simply indicate the status of the test tap area and will be influenced by ambient influences (scatter capacity).

Appropriate reference data will already be available if a reference measurement has been carried out during the final acceptance tests.

▶ Carry out a reference measurement of the bushing on site in order to be able to compare later measurements (identical measuring conditions) (Chap. 7.3 on page 27).

7 Maintenance

This chapter describes the activities and tests for maintenance of the bushing.

7.1 Maintenance schedule

Maintenance work	Interval	Described in …
Check and clean insulator surface	Check: Annually or together with transformer maintenance Cleaning: Only with acute necessity	Chapter 7.2 on page 25
Check bushing electrically	After the first 7-10 years of operation Thereafter according to the measurement result at intervals of 3 years or less	Chapter 7.3 on page 27
Check the temperature using a thermal image	At the discretion of the operator	Chapter 7.4 on page 31

7.2 Check and clean insulator surface (silicone insulator)

The insulator surface is water repellent (hydrophobicity). Discharge traces on the insulator surface change the water repellent features of the composite insulator.

- ▶ Make a visual check of the composite insulator for discharge traces and material damage.
- ▶ In the event of discharge traces, find out the cause of the discharges and eliminate them.
- ▶ Rectify any material damage.

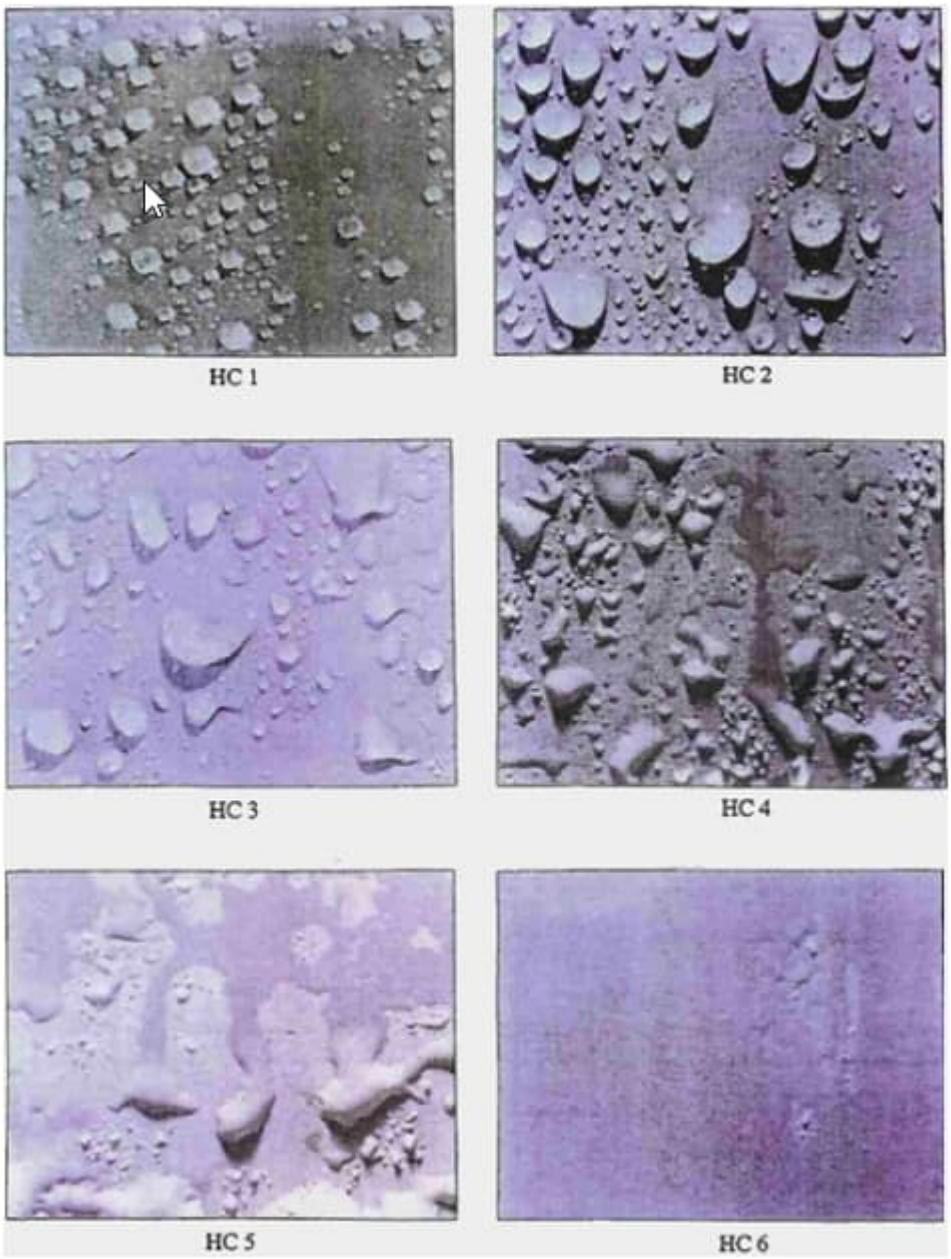

Fig 12: HC-Classification

The HC classification provides an approximate statement concerning the water repellent features of the composite insulator. The HC classification is simply a rough comparative procedure and does not permit any statement of a guaranteed operating performance.

- ▶ In wind-free and dry weather, spray a hand-size area abundantly with water from a spray bottle at a distance of approx. 30 cm.
- ▶ Compare the image of the drops with the HC classification.
  → If the image of the drops corresponds to the HC classes HC 1, HC 2 or HC 3, then the water repellent feature of the composite insulator is still adequate.

NOTICE

Material damage from too frequent cleaning of the insulator surface

Cleaning greatly changes the water repellent property of the insulator surface. The insulator surface gets its water repellent property back approximately 1 ... 2 days after cleaning. If cleaning is too frequent, the water repellent property is reduced over the long-term.

► Do **not** clean the composite insulator regularly - only as and when required.

► When cleaning, observe:

- Non-fraying cloth
- Non-aggressive cleaning agent (Rivolta B.W.R. 210)
- Low effort applied

7.3 Check bushing electrically

⚠ DANGER

Danger to life from electrocution

There is a danger to life from electrocution during the measurements.

► Make sure that there are no persons in the vicinity of the bushing during the electrical measurements.

► Carry out the electrical measurements only if you have experience with the measuring equipment, the measuring layout and the interpretation of the measurement results.

NOTICE

Material damage caused by improperly conducted electrical measurements

The bushing may suffer damage from improperly carried out electrical measurements. The capacity is influenced by the environment. The power factor tan δ is affected by moisture, the weather etc.

► Carry out the electrical measurements only if you have experience with the measuring equipment, the measuring layout and the interpretation of the measurement results.

► Test the bushing electrically with suitable measuring equipment and measuring procedures.

7.3.1 Measuring equipment

▶ Use appropriate measuring equipment or contact HSP.

7.3.2 Measuring procedure

The measuring procedures differ by the coupling of the measuring signal:

- With not grounded measurements, the test voltage is applied to the conductor on the bushing and the measuring signal is taken from the test tap on the bushing.
- The “grounded” measuring procedure is used if the bushing to be measured does not have a test tap.

The bushings in this range all have a test tap.

▶ Take further details concerning the measuring procedures from the instruction manuals of the measuring equipment.

7.3.3 Threshold values

There are threshold values for the material RIP (resin impregnated paper) for the deviation of capacity and the power factor from the reference value.

The effect of the ambient temperature must be taken into account when carrying out the measurements:

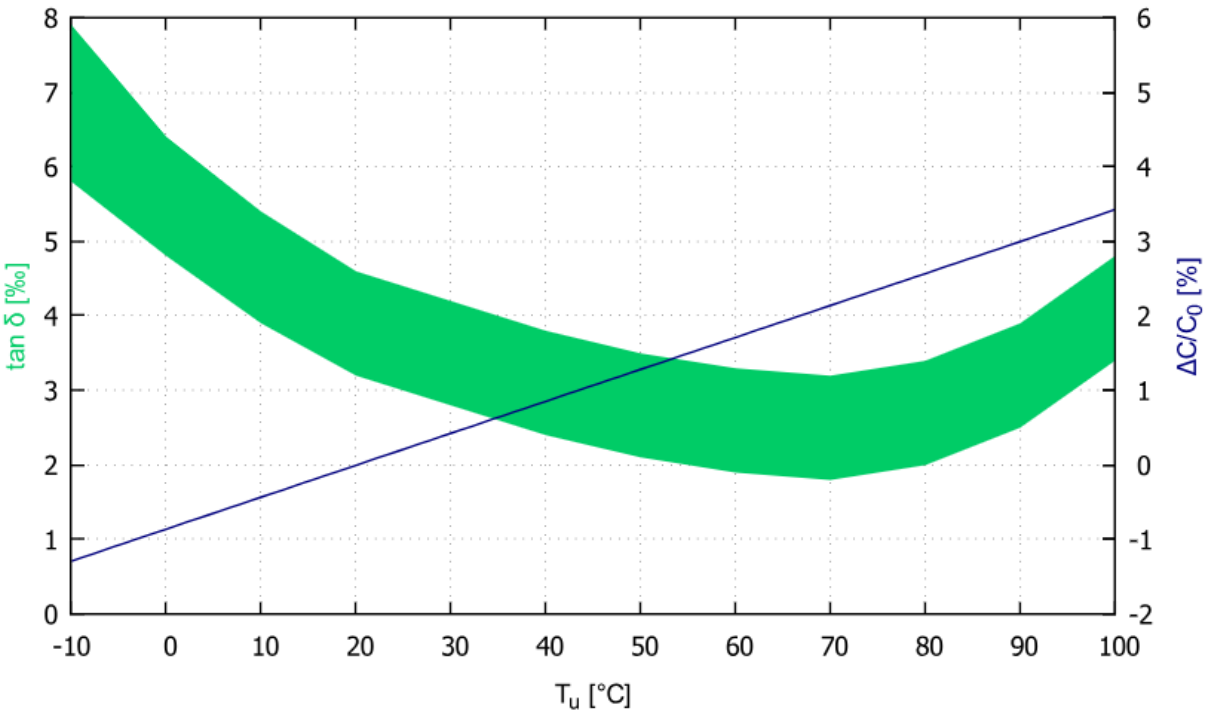

Fig. 13: tan δ (T_U) and $\Delta C/\Delta C_0$ (T_U)

Axis	Meaning
X	Ambient temperature T_U of the bushing
Y (left)	Power factor tan δ depending on the ambient temperature T_U
Y (right)	Change of main capacitance $\Delta C/\Delta C_0$ depending on the ambient temperature T_U

If the measured capacity C deviates from the reference capacity C0 after the temperature correction, the main insulation may have suffered a partial breakdown.

The level of capacity deviation caused by a partial breakdown depends on the grading layers. The grading layers rises with increasing voltage level and the capacity deviation reaches the level of measuring accuracy of the capacity measurement.

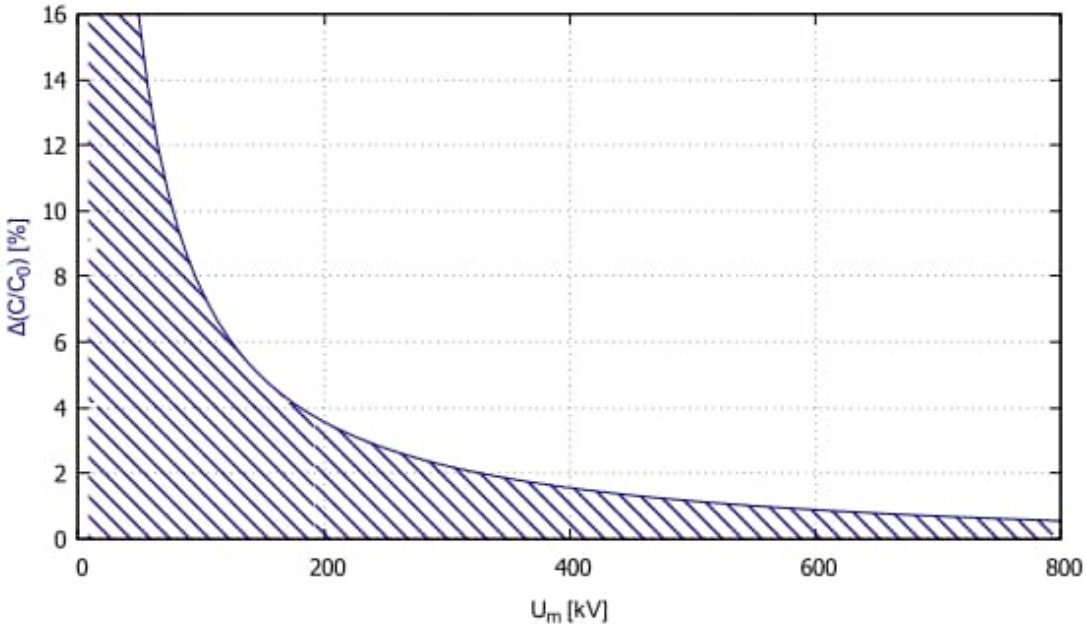

Fig. 14: $\Delta C/\Delta C_0$ (U_m)

Axis	Meaning
X	Voltage U_m of the bushing
Y	Change of capacity $\Delta C/\Delta C_0$ depending on the voltage U_m

▶ If the capacity deviation indicates partial breakdowns, then:
▷ Take the bushing out of service.
▷ Contact HSP.

7.3.4 Test tap

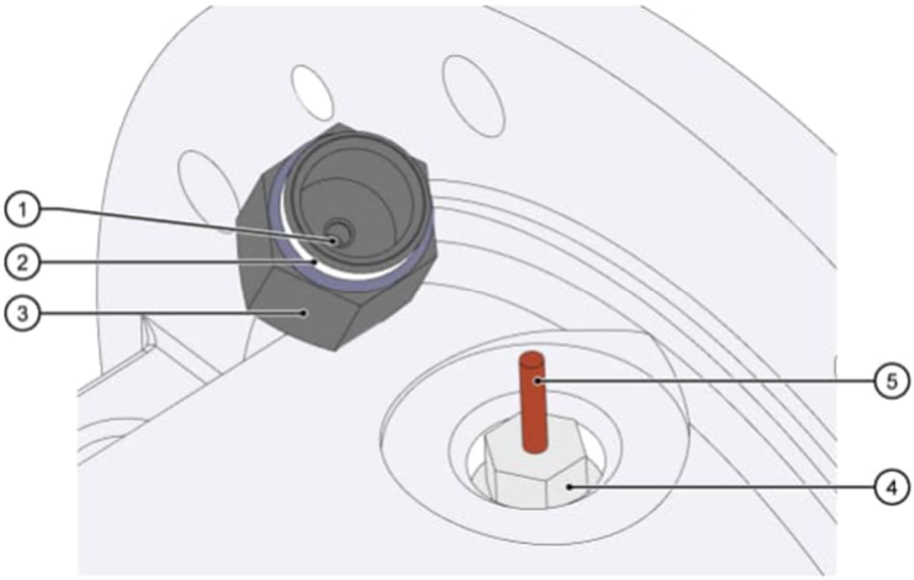

Fig. 15: Test tap

Item	Part	Item	Part
1	Grounding contact	4	Test tap
2	O-ring	5	Insulated bushing with pin
3	Removable cap		

The last grading layer of the capacitive grading is directed out using the test tap (4) (insulated bushing (5)).
The removable cap (3) has an o-ring seal (2) to ensure that the inner space of the test tap remains free from humidity.
In operation, the screwed-on removable cap grounds the pin with the help of a grounding contact (1).

- ▶ Connect the measuring lead to the pin.
- ▶ Carry out the measurements.

NOTICE

Material damage from missing removable cap

The test tap is not self-grounding. If the bushing is operated with an open test tap, then the insulated bushing in the test tap will be destroyed followed by inner fault of the entire bushing.

▶ Always screw the removable cap in place after a measurement.

- ▶ Make sure that the removable cap is always screwed in place before operating (Torques acc. to Chap. 11 on page 35)

7.4 Check the temperature using a thermal image

- ▶ If the installations are regularly checked using a thermal image, then observe the following when carrying this out::
  - The temperature at the outer contact point (the lead clamp) normally increases by up to 40 K with regard to the ambient temperature.
- ▶ With an increase of temperature greater than 40 K or with over temperatures under low load, check the contacts.

Hotspots over the outdoor insulator length can cause a nonuniform temperature distribution.

- ▶ Make a more detailed investigation of possible hotspots (possibly contact HSP).

8 Repair

Only those parts of the bushing that are accessible from the outside can be repaired. External damage to silicone sheds must only be repaired using special procedures. The composite insulator on the bushing cannot be removed.

- ▶ In the event of damage, first contact HSP (quoting the serial number of the bushing).
- ▶ Discuss the next steps with HSP in the event of smaller or larger damage to the bushing.

8.1 Smaller damages

- ▶ Have the bushing repaired on site by HSP or request repair instructions from HSP.

8.2 Huge damages

In the event of huge damages, e. g. after failure of the bushing in an inner fault, the bushing cannot be repaired on site. HSP can use appropriate measures to investigate the bushing in the HSP factory.

- ▶ If necessary, send the bushing back to HSP (quoting the returns number issued by HSP in advance).

9 Storage

The complete bushing is shrink-wrapped in the original crate in a plastic film with inserted desiccant bags. With this packaging, the bushing can be stored in covered, dry rooms for 12 months.

If the bushing is packaged in an aluminium-laminated film instead of the plastic film, it can be stored for 24 months under the same conditions. Outdoor storage is not permitted.

For long-term storage >12 or >24 months, the desiccant inside the foil cover must be replaced at the end of the storage period and the foil cover resealed.

Storage conditions:

- Storage in covered, dry rooms
- Temperature range according to operating conditions Chap. 4.1
- Humidity max. 80% rel., non-condensing
- Crates must be stored horizontally
- The crates can be stacked once

Open-air storage in the original crate is not possible.

10 Disposal

The constituent parts of the bushing are non-toxic, not self-inflammable and not physically burdening. They can be disposed of as industrial waste.

10.1 Constituent parts of the bushing

The bushing contains:

- Conductor bolt: Cu-ETP or Cu-HCP
- Insulating body: Epoxy-resin impregnated special paper with aluminum foils
- Armatures: made from aluminium alloys, copper alloys, brass or stainless steel, depending on the version
- Flanges: made from aluminium alloys, brass or stainless steel, depending on the version
- Central tube: Aluminum alloys
- Fixing materials, test tap, screw etc.: Stainless steel, aluminum alloys and brass
- Polyurethane-elastomer (Dry-foam-filling), foamed with Nitrogen
    - Older bushings (manufacturing before 2024) may be filled with an SF6-foamed elastomer. This SF_6 content is shown on the rating plate of the bushing. This polyurethane-elastomer with SF_6 must be burnt without residue at min. 1200°C, in accordance with CIGRE: SF_6 Recycling Guide.
- Silicone insulators

  Sealing: Silicone elastomer

The insulating body is rigidly connected to the composite insulator via the dry-foam-filling. It is best to split (saw/cut) the bushing into several parts for easy and improved disposal.

11 Standard torques

11.1 Standard torques

Screw	Torque [Nm]	Torque [kpm]
M4	1.10	0.11
M5	2.20	0.22
M6	4.00	0.40
M8	10.00	1.00
M10	19.00	1.90
M12	33.00	3.30
M14	52.00	5.20
M16	80.00	8.00
M18	110.00	11.00
M20	160.00	16.00
M22	210.00	21.00
M24	255.00	25.50
M27	370.00	37.00
M30	510.00	51.00

11.2 Standard torques for test-tap caps

Screw	Torque [Nm]	Torque [kpm]
M24 x 1,5	15,00	1,5
M30 x 1,5	15,00	1,5

Pioneering
high voltage.

www.hspkoeln.de

HSP Hochspannungsgeräte GmbH

Camp-Spich-Str. 18
53842 Troisdorf-Spich
Germany

Tel: +49 (0) 22 41/25 26-0
Fax: +49 (0) 22 41/25 26-116

Email: contact@hspkoeln.de

Installation, operating and maintenance instructions

Range GSEWt

05/2025

Brands and trademarks used in this document are the property of HSP Hochspannungsgeräte GmbH.

All rights reserved.

The information in this document contains general descriptions and technical options available, which may not apply in all cases.

The required technical options should therefore be specified in the contract.